POWERLINK
Power Systems

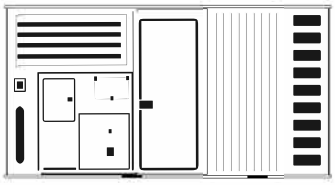

Generator set

Containerized type

B1250S

SPECIFICATIONS

www.powerlinkworld.com

EB series
B1250S
50 Hz @ 1500rpm,3-phase/5-wiring

1 Standards & Conditions

Design Standards

The designs and the productions are in conformity with:

- Conformite Europeenne (CE)
- ISO8528-5:2005
- GB/T2820.5-2009

Environmental Operating Conditions

- Installation place: Outdoors or indoors (well ventilated).
- Ambient temperature: -25℃ to 45℃.The coolant heater is needed when the temperature is below 5℃
- Humidity: Less than 80%.
- Altitude: Below one thousand (1000) meters.

Factory Inspection

- Inspection items.
- Protection devices working test.
- Starting ability in normal temperature.
- 50% rated power load moment capability.
- Voltage deviation and speed variation: 0%, 25%, 50%, 75%, 100%, 110% Load.

Painting Process

- Painting process specifications and colors are based on the manufacturer's standard.
- The customer could also choose the color which the manufacturer offers.

2 General Features

- Baudouin engine 12M33G1400/5
- Close coupled to Powerlink alternator PL6E
- Microprocessor control module PLC920
- Main circuit breaker: 2000A
- Rotate speed governor: ECU
- Excitation System: PMG
- A.V.R.Model: MX341
- Key switch
- Emergency stop switch
- ATS (automatic transfer switch) receptacle
- 4x12V/150AH sealed for life maintenance free battery
- Lockable battery isolator switch
- Powder coated canopy
- 50℃ radiator
- Fire extinguisher
- Oil pump on the engine
- Steel base frame with forkslots
- Vibration isolators between the engine/alternator and base frame
- Dry type air filter
- Fuel tank for 6 hours running
- Drain points for fuel tank
- Fuel inlet pump and control box for the fuel tank
- Added fuel-water separator for fuel tank
- Operation Manual / Specifications

3 Equipment Specification

General technical data

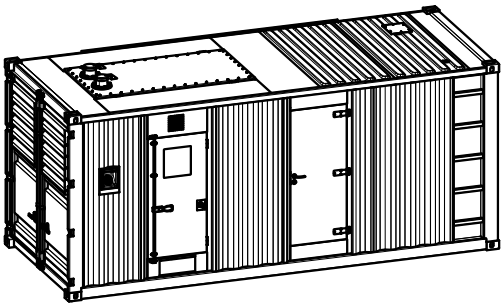

Model..... B1250S
Structure type C
Tank capacity..... 1600L
Dry weight..... 13800kg
Noise level @7m 79.8dBA
Dimensions L×W×H..... 6058x2438x2591mm
Standby Power 1375kVA/1100kW
Prime Power.....1250kVA/1000kW

Voltage	380V	400V	415V
Ampere	1899A	1804A	1739A

Genset Fuel Consumption					
Frequency/Load	25%	50%	75%	100%	110%
50Hz (L/h)	71.2	129.2	190.7	258.6	288.8

Diesel Engine

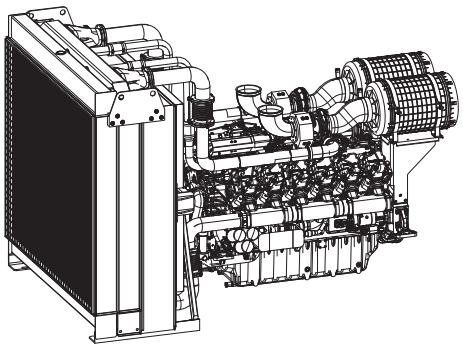

Engine Manufacturer/Brand..... Baudouin
Engine Model.....12M33G1400/5
Dimensions L×W×H.....3525×2241.5×2243mm
Dry Weigh (approx.) 4575kg
Number of Cylinders.....12
Bore 150mm
Stroke 185mm
Displacement.....39.2L
Compression Ratio 15.0
Type of Injection .....High Pressure Common Rail
Intake System.....Turbocharged and aftercooled
Intake Resistance .....≦6.5kPa
Cooling System .....Water cooled
Fan ..... Pusher
Battery Voltage 24V
Type of Fuel..... BS2869 class A2 or BS EN590
Type of Oil ..... API CH4 15W/40
Oil Capacity 155L
Type of Coolant .....Glycol mixture
Coolant capacity.....303L
Back Pressure .....≦7.5kPa
Standby Power 1210kW
Prime Power.....1110kW
Fuel Consumption(100%load).....258.61L/h

Alternator

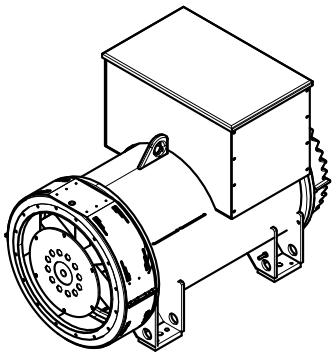

Alternator Manufacturer/Brand ..... Powerlink
Alternator Model PL6C
Exciter.....Brushless
Cooling Fan ..... Cast alloy aluminum
Windings.....100% copper
Insulation Class ..... H
Winding Pitch 2/3
Terminals 6
Drip Proof IP23
Altitude.....≤1000m
Overspeed 2250rpm
Air Flow..... 1m³/s(50Hz),1.2m³/s(60Hz)
Voltage Regulation .....±0.5%
Total harmonic TGH / THC at no load < 4 % - on load < 4%
Telephone Interference..... THF<2%;TIF<50

PLC-920 Control System

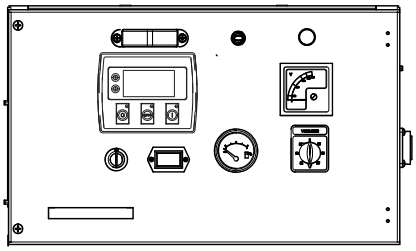

PLC-920 is an advanced control module based on micro-processor designed to control the engine via a key switch and push buttons on the front panel. The module is used to start and stop the engine and indicate fault conditions, automatically shutting down the engine and giving a true first up fault condition of an engine failure.

Standard Control Function

- Manual Engine Control Module
- Low Oil Pressure
- High Engine Temperature
- Auxiliary Shutdown
- Overspeed Protection
- Protection hold-off timer
- Charge Failure warning

4 Overall Dimensions

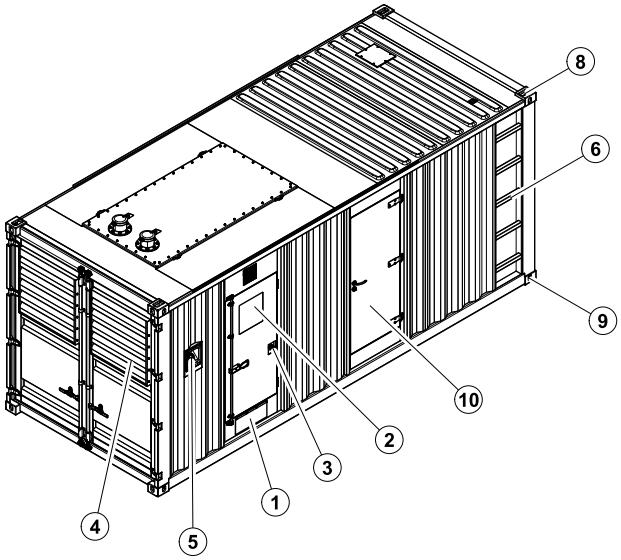

⑥ Ladder
⑤ Fuel inlet
④ Air inlet
③ Emergency stop switch
② Control cabinet
① Cable trench

⑫ Exhaust gas outlet
⑪ External fuel inlet/Return hose fitting
Coolant/Oil drain hose fitting
⑩ Access door
⑨ Fixing lug
⑧ Lifting lug
⑦ Canopy

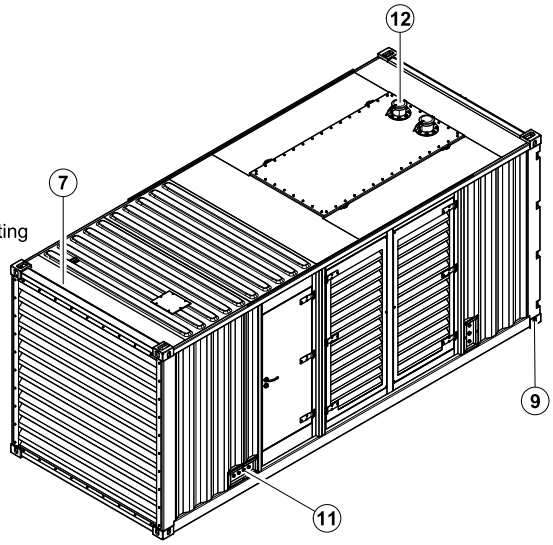

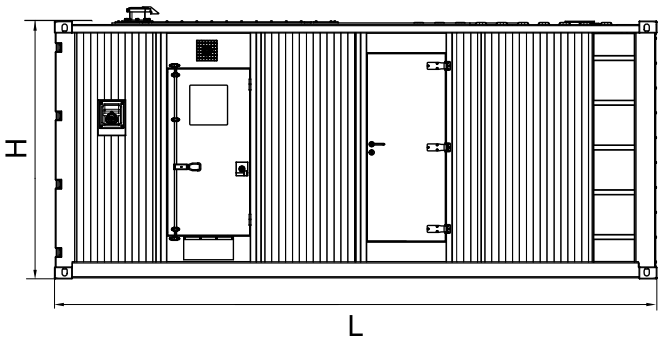

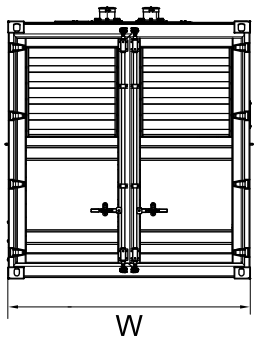

5 Control System

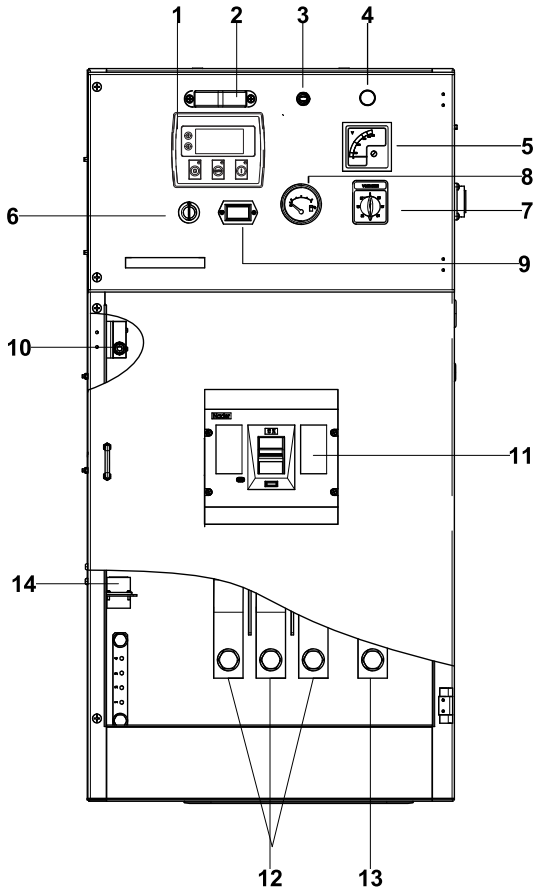

Control & field wiring cabinet

Ref.	Description
1	PLC-920 control module
2	Control cabinet lamp
3	Control cabinet lamp switch
4	Charge indicator
5	Voltage meter
6	Key switch
7	Voltage changer-over switch
8	Fuel level meter
9	Time counter
10	Limit switch
11	Main circuit breaker
12	Live wire terminal
13	Neutral wire terminal
14	Mains input/Remote control/ ATS communication connector

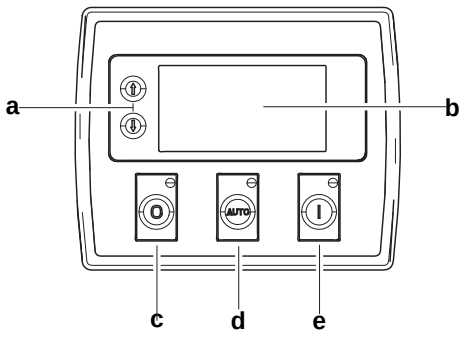

Control module

Ref.	Description
a	Navigation button£» Accept (Configuration mode only)
b	Main status display
c	Stop/reset button£» Next page (Configuration mode only)
d	Auto start button£» Decrease value/next item (Configuration mode only)
e	Start button£» Increase value/next item (Configuration mode only)

1000035955-A2–E
04.2023

http://www.powerlinkworld.com

Specification may change without prior notice. For more info., contact Power Link or your local distributors please.

©2023 POWERLINK